

Planète 400 AD ADR CGLine+

Anti-panic lighting for premises with explosion risk

Applications:
Aluminium and glass enclosure for explosive atmospheres (gas and dust).

Suitable for all gas groups (IIA, IIB, IIC).

Marking:

- Ex II 2G - EExdIICT6
- Ex II 2D - T85°C

www.marque-nf.com

High safety
Low environmental impact

Key benefits

- Aluminium enclosure
- Suitable for all gas groups
- Very low consumption
- Reduced maintenance
- No lamp replacement

Technical characteristics

Flux	330 lm
Test system	SATI automatic test, compatible with ADR and CGLine+ systems
Housing	
Mounting type	Wall or ceiling mounting
Material	Aluminium and glass enclosure
Colour	White RAL9003
Protection ratings	IP65 / IK07
Connection	Supplied with fixing spacers and explosion-proof cable gland for unarmoured cable; without plugs for disconnection in zones
Power supply	220 - 240 Vac 50/60 Hz
Ambient temperature range	5°C to 40°C
Battery	Ni-Cd
Light source	32 LEDs
Dimensions	Housing: 470 x 190 mm Fixings: 406 x 160 mm
Class	II
Weight	5 kg

Order codes

Product	Reference	Function	Standby and emergency lamps	Autonomy	Flux (lm)	Battery	Consumption
Planète 400 AD ADR CGLine+	**LUM17141**	Anti-panic	32 LEDs	1 hour	330	5 x 1.2 V / 1.7 Ah	1,1 W

Planète 400 AD ADR CGLine+ - Dimensions (mm)

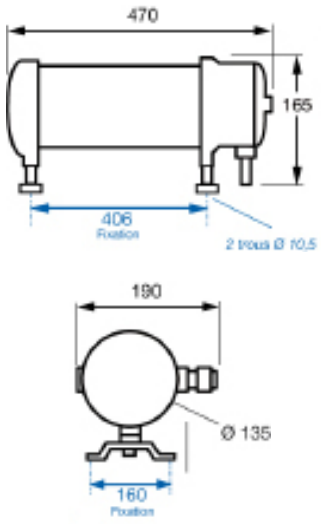

Accessories

	Product	Reference
	Pictogram arrow down	LUM10401
	Pictogram arrow right	LUM10403
	Pictogram arrow left	LUM10404
	TLU AT+ remote control	LUM11312
	TL CGLine+, remote control for use with the CGLine+ protocol only	LUM10319
	5-pole plug	GHG5117506R0001
	Plug base	GHG5114506R0001
	Maintenance battery pack	LUM11040

Cooper Sécurité SAS (Eaton Group)
PEE II - Rue Beethoven
63204 Riom
T : 0 820 867 867 (0,12 €/min)
F : 0 820 888 526
www.cooperfrance.com
www.eaton.com

The technical characteristics and dimensions given in this document may be changed at any time for technical, normative, regulatory or economic reasons. They do not constitute a commitment of Cooper Sécurité SAS (Eaton Group). Photos are not contractual.