CFEAPULLKIT
Emergency assist alarm stand alone kit



The Emergency Assist Alarm stand alone kit provides the perfect solution for signaling the requirement for assistance in toilet areas, bathrooms or hotel rooms.

This is a simple 2 wire system that has been specifically designed to meet the needs of disabled service users and conforms to all the relevant requirements.

The use of combined high output blue LED indication and buzzer ensures a response to the call.

The Emergency Assist Alarm stand alone kit comprises of all the components needed to install a fully compliant system, with additional parts available separately.

Features and benefits

- Complies with regulations and recommendations
- Dual loop pull cord
- High contrast labels
- Blue indication
- Quick and simple installation, with limited cabling requirements
- High contrast printing for increased visibility
- Tactile braille signage to assist partially sighted people to easily operate the cancel plate

Powering Business Worldwide

System installation

The Emergency Assist Alarm should be installed in accordance with the local standards and regulations. The diagram below demonstrates a typical layout for installation in a disabled person toilet.

Note: Where pertinent other or alternative standards of design and installation should be adhered to.

All system components are designed to be sited internally and positioned in locations where they are readily accessible by the user. The area should be clean and dry. Sound and light levels allow the status of all device indicators and sounders to be seen and heard.

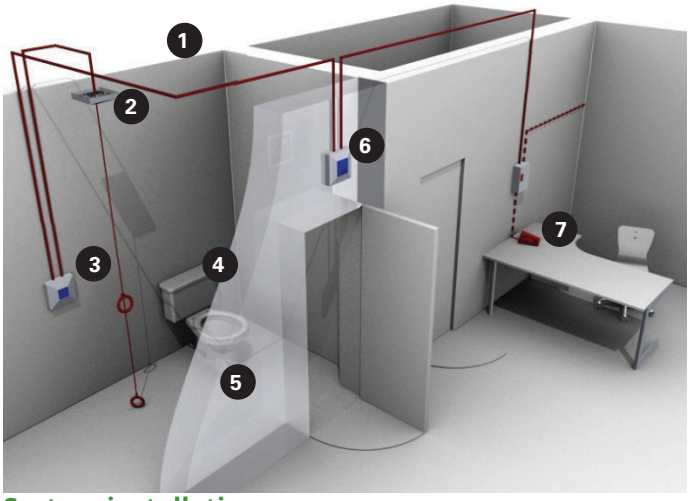

System installation

1. Ceiling pull is surface mounted
2. The Ceiling Pull should be positioned so that its readily accessible from the WC or bath (where applicable).
3. The Cancel Button should be positioned so that it is reachable from the WC and a wheelchair.
4. The upper cord pull should be located between 800mm & 1000mm above floor level.
5. The lower cord pull should be exactly 100mm above floor level (remove excess cord).
6. The Over Door Indicator provides an audible and visual signal to indicate the area where assistance is required.
7. The Power Supply is situated in corridor and supplied via switched fuse spur.

Mains wiring

The general requirement for the mains supply to the call controller is fixed wiring, using three core cable of no less than 1mm^2. This should be fed from an isolating switched fused spur, fused at 3A, which is marked appropriately and secure from unauthorised operation.

All mains wiring should be provided in accordance with local and relevant national wiring regulations and standards.

Extra low voltage (ELV) wiring

Always segregate low voltage wiring from the mains wiring. System requires minimum 2 core 0.4mm^2 cable. All wall-mounting devices should be mounted onto a back box of the required depth.

Wiring the unit

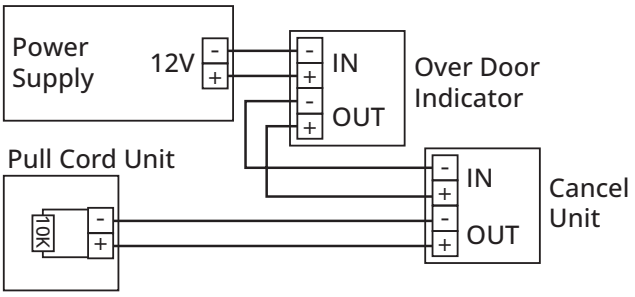

OUT	IN
PSU	Over door indicator
Over door indicator	Cancel unit
Cancel unit	Pull cord unit

System operation

Normal state	Power supply unit power LED is lit.
To place a call	Operate the pull cord. LEDs will illuminate pull cord unit, cancel unit and over door indicator. An internal buzzer will also sound in the over door indicator.
To reset call	Press the cancel button.

Note: when used in conjunction with the 4 way indicator panel CFEASL4, one CFEAPULLKIT is used to provide the power supply and one set of devices to the system. The other sets of devices are ordered as the kit CFVCEA.

Pull station installation

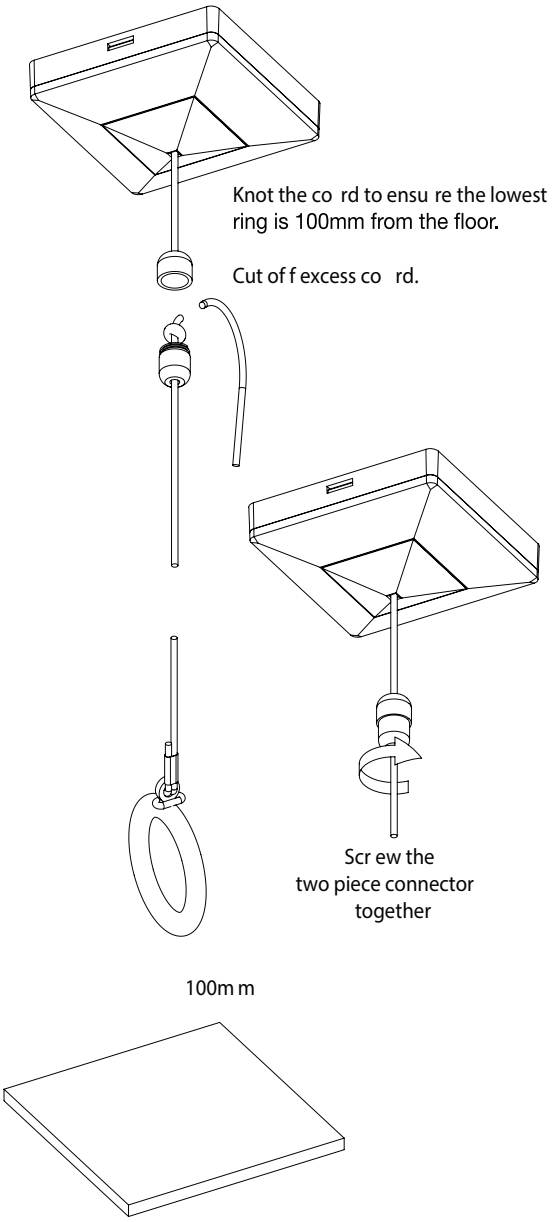

Catalogue numbers

Description	Code
Emergency assist alarm - stand alone kit	CFEAPULLKIT
Individual emergency assist alarm components	
Emergency assist pull cord	CFEAPULL
Emergency Assist Alarm Kit no PSU	CFVCEA
Over door indicator	CFEAODI
Cancel button	CFEARSP
Pull cord accessory pack	CFEACORD

Eaton
EMEA Headquarters
Route de la Longeraie 7
1110 Morges, Switzerland
Eaton.com

©2026 Eaton
All Rights Reserved
DS0101-B
April 2026

Information is believed to be accurate, however no representation or warranty is given and Eaton assumes no liability with respect to the accuracy of such information. The information provided in this document is subject to change without notice.

Eaton is a registered trademark.

All other trademarks are property of their respective owners.

Powering Business Worldwide