CASB393, CASB393WP, CASB393-VSR, CASB393WP-VSR

Intelligent addressable wall sounder open class visual alarm device (VAD)





Intelligent addressable wall sounder open class visual alarm devices offer low current consumption, multiple sound output levels and LED visual notification.

The wall sounder open class VADs come in standard and weatherpoof variants, the weatherproof variants are IP66 rated meaning they are ideal for outdoor locations.

All variants of the wall sounder open class VAD are suitable for markets where EN54-23 VADs are a requirement.

The wall sounder VAD visual stop on reset (VSR) variant is suitable for use in applications where the VAD element is required to operate until the fire system has been reset.

Features and benefits

- Integral short circuit isolator
- Loop powered
- Soft addressed
- Quick and simple to install
- Selectable tones controlled by the panel
- Adjustable volume controlled by the panel
- IP66 version available as both an internal and weatherproof variant available
- Easy to maintain/service
- Wall sounder VAD visual stop on reset version available

Powering Business Worldwide

Technical specification

Code	CASB393, CASB393WP, CASB393-VSR, CASB393WP-VSR
Supply Voltage	19 – 30vdc
Cable Size / type	0.5 - 2.5mm/ FIRETUF, FP200 or MICC
Standby current	< 450 uA
Operating temperature	-10 to +55 degrees C (95%RH)
Sound output @ +/-3d8 (set by panel)	Low volume : 87dB @ <8.6mA Medium volume : 93dB @ <10mA High volume : 100dB @ <11mA
Environment Category CASB393	Type A
Environment Category CASB393WP	Type B
Compliance	EN54-3 Fire Alarm Device – Sounder EN54-17:2005 EN54-23:2010 Fire Alarm Device - VAD
Tones (set by panel)	Continuous 984Hz Pulsed 984 / 0Hz pulse 1Hz* Two Tone 644 / 984Hz @ 1Hz cycle Slow whoop 500-1200Hz in 3.5 seconds / 0.5secs gap
Beacon	0.5Hz Flash
Total Loop Resistance for correct operation of short circuit isolator	50Ω (max)
Parallel Fault Resistance to be seen at the Control Panel for isolators to open	200Ω (typ)
Continuous Current allowable through isolator	700mA (max)
Isolator Resistance in closed state	0.26Ω (max)
Leakage Current into direct short circuit with isolator open	14mA (max)
Voltage at which isolator changes from open to closed or closed to open state	3.8V to 11V
Maximum switching current of isolator	1.5A

* Pulsed tone not available on CASB393-VSR, CASB393WP-VSR

System functionality

1. Volume and tone are set by control panel, no need to access sounder to alter setting.
2. Soft addressed.
3. VAD stop on reset
   a. On fire alarm condition, both audible and visual elements operate
   b. On alarm silence command, the audible element will silence. The visual element will continue to operate. This behaviour will not change until system reset.
   c. On system reset, the visual element will turn off and both audible and visual elements will reset to quiescent operation.

Dimensions

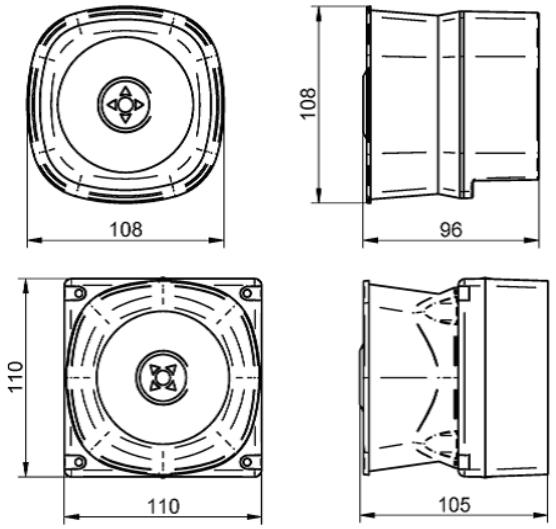

Description	H (mm)	W(mm)	D (mm)
CASB393, CASB393-VSR (Top)	108	108	96
CASB393WP, CASB393WP-VSR (Bottom)	110	110	105

Standard connections

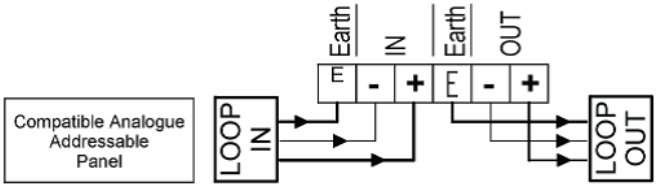

Installation

1. Installation is simple using first fix base.
2. First fix base is fixed to mounting surface via 2 fixings holes.
3. Cables enter through aperture in base (rear entry only).
4. Main body is then clipped into place on base, main body locks into place when pressed into position.
5. Cables pass through aperture in sounder body and terminate at the front.
6. Connections are to connector block on front of main sounder body.

Warning
Do NOT use high voltage testers if ANY equipment is connected to the system.
Earth screen must be continuous along entire length of the loop.

Catalogue numbers

Description	Code
Wall Sounder Open Class VAD	CASB393
Wall Sounder Open Class VAD, Visual Stop on Reset	CASB393-VSR
Weatherproof Wall Sounder Open Class VAD	CASB393WP
Weatherproof Wall Sounder Open Class VAD, Visual Stop on Reset	CASB393WP-VSR

Note:
All information correct at the time of writing. Eaton reserves the right to make changes to this information. Please contact Eaton if you have any queries.

Eaton is a registered trademark.

All other trademarks are property of their respective owners.

Powering Business Worldwide

Eaton
EMEA Headquarters
Route de la Longeraie 7
1110 Morges, Switzerland
Eaton.com

© 2025 Eaton
All Rights Reserved
DS0104-A
December 2025