# CASB393, CASB393WP, CASB393-VSR, CASB393WP-VSR

## Intelligent addressable wall sounder open class visual alarm device (VAD)





Intelligent addressable wall sounder open class visual alarm devices offer low current consumption, multiple sound output levels and LED visual notification.

The wall sounder open class VADs come in standard and weatherpoof variants, the weatherproof variants are IP66 rated meaning they are ideal for outdoor locations.

All variants of the wall sounder open class VAD are suitable for markets where EN54-23 VADs are a requirement.

The wall sounder open class VAD visual stop on reset (VSR) variant is suitable for use in applications where the VAD element is required to operate until the fire system has been reset.

### Features and benefits

- Integral short circuit isolator
- Loop powered
- Soft addressed
- Quick and simple to install
- Selectable tones controlled by the panel
- Adjustable volume controlled by the panel
- IP66 version available as both an internal and weatherproof variant available
- Easy to maintain/service
- Wall sounder open class VAD visual stop on reset version available

Powering Business Worldwide

## Technical specification

| Code | CASB393, CASB393WP, CASB393-VSR, CASB393WP-VSR |
|---|---|
| Supply Voltage | 19 – 30vdc |
| Cable Size / type | 0.5 - 2.5mm/ FIRETUF, FP200 or MICC |
| Standby current | < 450 uA |
| Operating temperature | -10 to +55 degrees C (95%RH) |
| Sound output @ +/-3d8 (set by panel) | Low volume : 87dB @ <8.6mA<br>Medium volume : 93dB @ <10mA<br>High volume : 100dB @ <11mA |
| Environment Category CASB393 | Type A |
| Environment Category CASB393WP | Type B |
| Compliance | EN54-3 Fire Alarm Device – Sounder<br>EN54-17:2005<br>EN54-23:2010 Fire Alarm Device - VAD |
| Tones (set by panel) | Continuous 984Hz<br>Pulsed 984 / 0Hz pulse 1Hz*<br>Two Tone 644 / 984Hz @ 1Hz cycle<br>Slow whoop 500-1200Hz in 3.5 seconds / 0.5secs gap |
| Beacon | 0.5Hz Flash |
| Total Loop Resistance for correct operation of short circuit isolator | 50Ω (max) |
| Parallel Fault Resistance to be seen at the Control Panel for isolators to open | 200Ω (typ) |
| Continuous Current allowable through isolator | 700mA (max) |
| Isolator Resistance in closed state | 0.26Ω (max) |
| Leakage Current into direct short circuit with isolator open | 14mA (max) |
| Voltage at which isolator changes from open to closed or closed to open state | 3.8V to 11V |
| Maximum switching current of isolator | 1.5A |

* Pulsed tone not available on CASB393-VSR, CASB393WP-VSR

## System functionality

1. Volume and tone are set by control panel, no need to access sounder to alter setting.
2. Soft addressed.
3. VAD stop on reset
   a. On fire alarm condition, both audible and visual elements operate
   b. On alarm silence command, the audible element will silence. The visual element will continue to operate. This behaviour will not change until system reset.
   c. On system reset, the visual element will turn off and both audible and visual elements will reset to quiescent operation.

## Dimensions

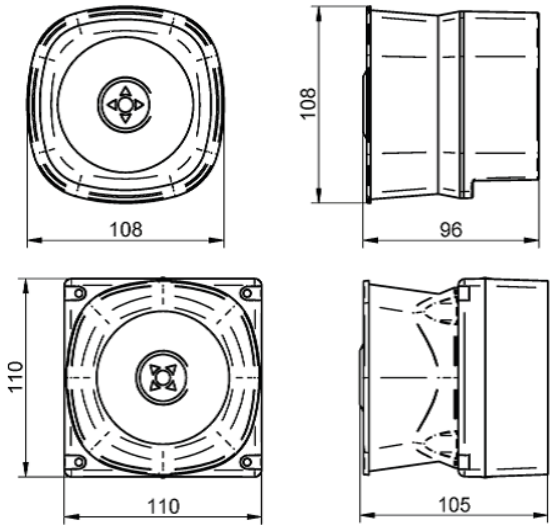


| Description | H (mm) | W(mm) | D (mm) |
|---|---|---|---|
| CASB393, CASB393-VSR (Top) | 108 | 108 | 96 |
| CASB393WP, CASB393WP-VSR (Bottom) | 110 | 110 | 105 |

## Standard connections

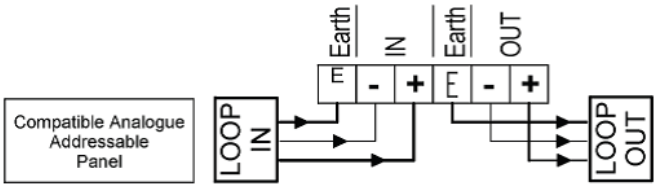


## Installation

1. Installation is simple using first fix base.
2. First fix base is fixed to mounting surface via 2 fixings holes.
3. Cables enter through aperture in base (rear entry only).
4. Main body is then clipped into place on base, main body locks into place when pressed into position.
5. Cables pass through aperture in sounder body and terminate at the front.
6. Connections are to connector block on front of main sounder body.

**Warning**
Do NOT use high voltage testers if ANY equipment is connected to the system.
Earth screen must be continuous along entire length of the loop.

## Catalogue numbers

| Description | Code |
|---|---|
| Wall Sounder Open Class VAD | CASB393 |
| Wall Sounder Open Class VAD, Visual Stop on Reset | CASB393-VSR |
| Weatherproof Wall Sounder Open Class VAD | CASB393WP |
| Weatherproof Wall Sounder Open Class VAD, Visual Stop on Reset | CASB393WP-VSR |

**Note:**
All information correct at the timeof writing. Eaton reserves the right to make changes to this information. Please contact Eaton if you have any queries.

Powering Business Worldwide

**Eaton**
EMEA Headquarters
Route de la Longeraie 7
1110 Morges, Switzerland
Eaton.com

© 2025 Eaton
All Rights Reserved
Publication No. DS0052-B
December 2025

Eaton is a registered trademark.

All other trademarks are property of their respective owners.